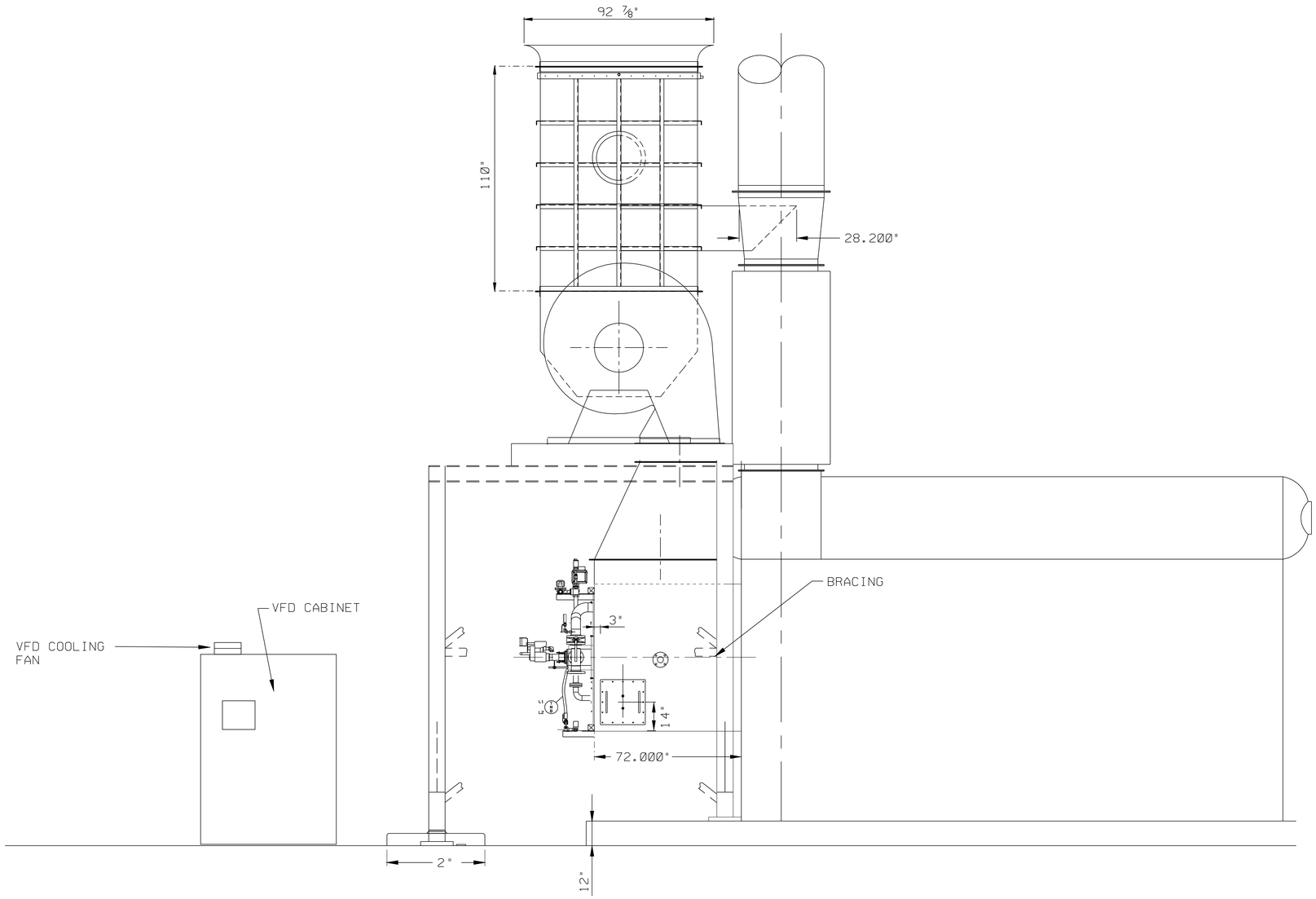

SEE FAN SUPPORT DIAGRAM
(S-24-69,70,71,72,73)
FOR DETAILS AND DIMENSIONS

REVISION	DATE	DESCRIPTION
AS-BUILT	6-28-06	CSC517475A(PAG)

SIGNATURES		DATE
DR.PETE G	ENG REDRAWN	6-28-06
CH GJB	APPR GJB	7-13-07
GLENN J. BUNCH		7-13-07
REV		
DISCP		
PE		
APPR C. BENNETT		7-13-07

NATIONAL AERONAUTICS & SPACE ADMINISTRATION
LYNDON B. JOHNSON SPACE CENTER HOUSTON, TEXAS

BUILDING 24

ULNB GENERAL ARRANGEMENT
SIDE VIEW BOILER #4

PROJECT NO.
PROJECT ID MR
SHEET NO. OF
CODE IDENT.NO. 21356
SIZE F
DWG NO. M-24-33A

CAD FILE NAME: M24Z33A.DGN

DWG NO. KA-1975

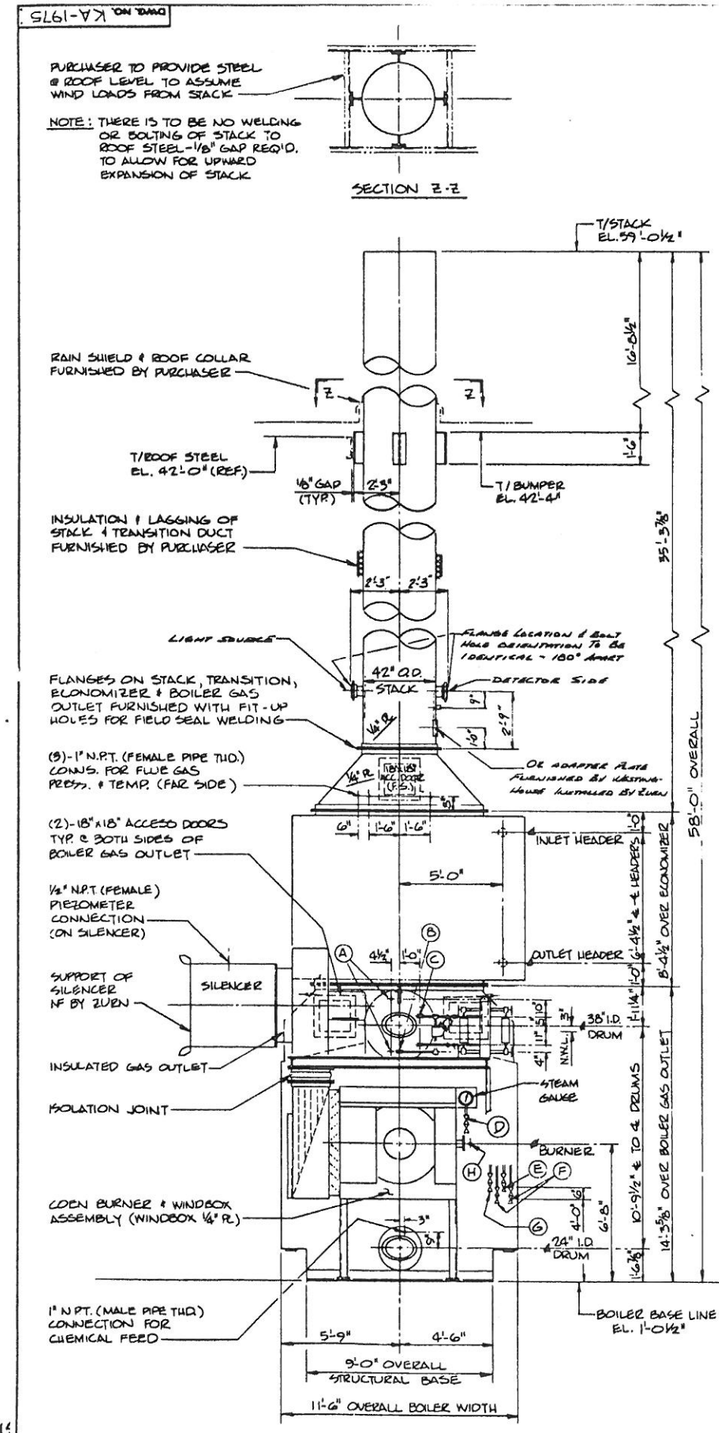

FRONT ELEVATION

CONNECTIONS (CONT'D):

- (Q) 6"-150# R.F. FLANGED CONN. FOR CO ANALYSIS
- (R) 1" N.P.T. HALF COUPLING CONN. FOR THERMOCOUPLE (CO ANALYZER)
- (S) 2 1/2" SCH. 80 BUTT WELD CONN. FOR FEEDWATER INLET
- (T) 1 1/2" N.P.T. (FEM. PIPE THD.) W/PLUG CONN. FOR HYDROTEST POTABLE WATER CONN.
- (U) 2 1/2" N.P.T. HALF COUPLING CONN. FOR PURGE AIR

CONNECTIONS:

- (A) (2)-1" N.P.T. (MALE PIPE THD.) CONNS. FOR DRUM LEVEL TRANSMITTER
- (B) 1" N.P.T. (MALE PIPE THD.) CONN. AUXILIARY LOW WATER CUTOFF
- (C) (2)-1 1/2" N.P.T. (MALE PIPE THD.) CONNS. FOR WATER COLUMN STEAM & WATER
- (D) 1/2" INSPECTOR'S TEST & DRAIN VALVES (STEAM GAUGE)
- (E) 3/4" WATER COLUMN DRAIN VALVES
- (F) 1/2" WATER GAGE DRAIN VALVES
- (G) 3/4" AUXILIARY LOW WATER CUTOFF DRAIN VALVES
- (H) 1" N.P.T. (MALE PIPE THD.) CONN. FOR FURNACE PRESSURE
- (J) 1/4" N.P.T. (MALE PIPE THD.) CONN. FOR WINDBOX PRESSURE
- (K) 1"-600# R.F. FLG'D. CONN. FOR ECON. RELIEF VALVE
- (L) 1" N.P.T. (MALE PIPE THD.) CONN. FOR ECONOMIZER VENT
- (M) 3/4"-3000# THREDOLET CONN. FOR ECONOMIZER THERMOMETER & WELL
- (N) 3/4"-3000# THREDOLET CONN. FOR ECONOMIZER TEST WELL
- (O) 2 1/2"-600# R.F. FLG'D. CONN. FOR ECONOMIZER FEEDWATER INLET & OUTLET
- (P) 1" N.P.T. (MALE PIPE THD.) CONN. FOR ECONOMIZER DRAIN

CASINGS:

FRONT & REAR:	1/4" CARBON STEEL PLATE
SIDE (OUTER):	12 GA. CARBON STEEL PLATE
INNER (SEAL):	12 GA. CARBON STEEL PLATE
ROOF:	10 GA. CARBON STEEL PLATE
UPPER DRUM:	16 GA. CARBON STEEL PLATE
DRUM HEADS:	12 GA. CARBON STEEL PLATE
WINDBOX:	1/4" CARBON STEEL PLATE

TUBES:

BOILER: 2" O.D. x .105" WALL SA-178 A E.R.W.S.
SUPERHEATER: 2" OD. x .165" WALL SA-213 T22 SMLS.

DRUMS:

UPPER: 7 7/32" MIN. THK. SA-515-70 P.V.Q.
LOWER: 27/32" MIN. THK. SA-515-70 P.V.Q.

PAINTING SPECIFICATIONS:

1. F.D. FAN, DRIVE AND OTHER VENDOR ITEMS TO BE MANUFACTURER'S STANDARD PAINT.
2. ALL EXPOSED CARBON STEEL SURFACES OF THE BOILER (EXCEPT FOR THE SUPERHEATER SUPPLY, SUPERHEATER INLET & SUPERHEATER OUTLET HEADERS, AND THE EXPOSED PORTIONS OF THE DRUM HEADS) TO BE HAND TOOL AND/OR SOLVENT CLEANED OF ANY OIL, MILL SCALE, RUST, ETC. THEN PAINTED ONE (1) COAT OF ZURN STANDARD RED OXIDE PRIMER PER ZURN STANDARD ES-1006.
3. THE SUPERHEATER SUPPLY, SUPERHEATER INLET, & SUPERHEATER OUTLET HEADERS, THE EXPOSED PORTIONS OF THE DRUM HEADS, THE TRANSITION DUCT & STACK TO BE HAND TOOL AND/OR SOLVENT CLEANED OF ANY OIL, MILL SCALE, RUST, ETC. THEN PAINTED ONE (1) COAT OF ZURN STANDARD HIGH TEMPERATURE PAINT PER ZURN STANDARD ES-1006.

ONE 60,000#/HR KEYSTONE STEAM GENERATOR

BOILER HEATING SURFACE: TOTAL - 5,378 FT²
CONVECTION - 4,669 FT²
RADIANT - 709 FT²
SUPERHEATER HEATING SURFACE: 185 FT²
DESIGN PRESSURE: 500 P.S.I.G.
OPERATING PRESSURE: 420 P.S.I.G. @ SUPERHEATER OUTLET
CAPACITY: 60,000#/HR CONTINUOUS (66,000#/HR PEAK) @ 420 P.S.I.G. & 600°F. F.T.T. @ SUPERHEATER OUTLET
FEEDWATER TEMPERATURE: 266°F. TO ECONOMIZER
BLOWDOWN: 2% OF FEEDWATER FLOW
FUELS: NAT. GAS @ 40 P.S.I.G. @ COEN CONN. (REG. TO 20 P.S.I.G. BY PURCH.) #2 OIL @ AMBIENT & 110 P.S.I.G @ COEN CONN. (REGULATED)
BURNER: COEN MODEL 465 LO-NOx TYPE CPF-24 W/GAS-ELECTRIC IGNITOR, 5/5 MULTI-SPUD GAS BURNER, (1) #2 MV STEAM ATOMIZING OIL GUN & (1) SPARE #2 MV STEAM ATOMIZING OIL GUN
BURNER MANAGEMENT SYSTEM: COEN AUTOMATIC NON-RECYCLING
COMBUSTION CONTROLS: WESTINGHOUSE
F.D. FAN: CLARAGE SIZE 73 BHP TYPE 165DA AER.4 W/PIEZOMETER TUBES, INLET VANE CONTROL & AEROACOUSTIC C1-24-A-3 SILENCER
F.D. FAN DRIVE: SIEMENS-ALLIS 75 HP 1800 RPM HI-EFFICIENCY 3 PH 60 HZ 460V (MTD. ON FAN BASE)
POWER SUPPLY: MOTOR 3 PH 60 HZ 460V
CONTROLS 1 PH 60 HZ 120V
ECONOMIZER: ENERGY 600# DESIGN
WEIGHTS: BOILER SHIPPING - 85,600# ECON. SHIPPING - 10,700#
BOILER OPERATING - 110,000# ECON. OPERATING - 11,700#
BOILER FLOODED - 118,000#
WATER CAPACITIES: BOILER OPERATING - 2,930 GALS.
BOILER FLOODED - 3,900 GALS.
ECONOMIZER FLOODED - 120 GALS.
INSTALLATION: INDOORS @ 20 FT. ABOVE SEA LEVEL

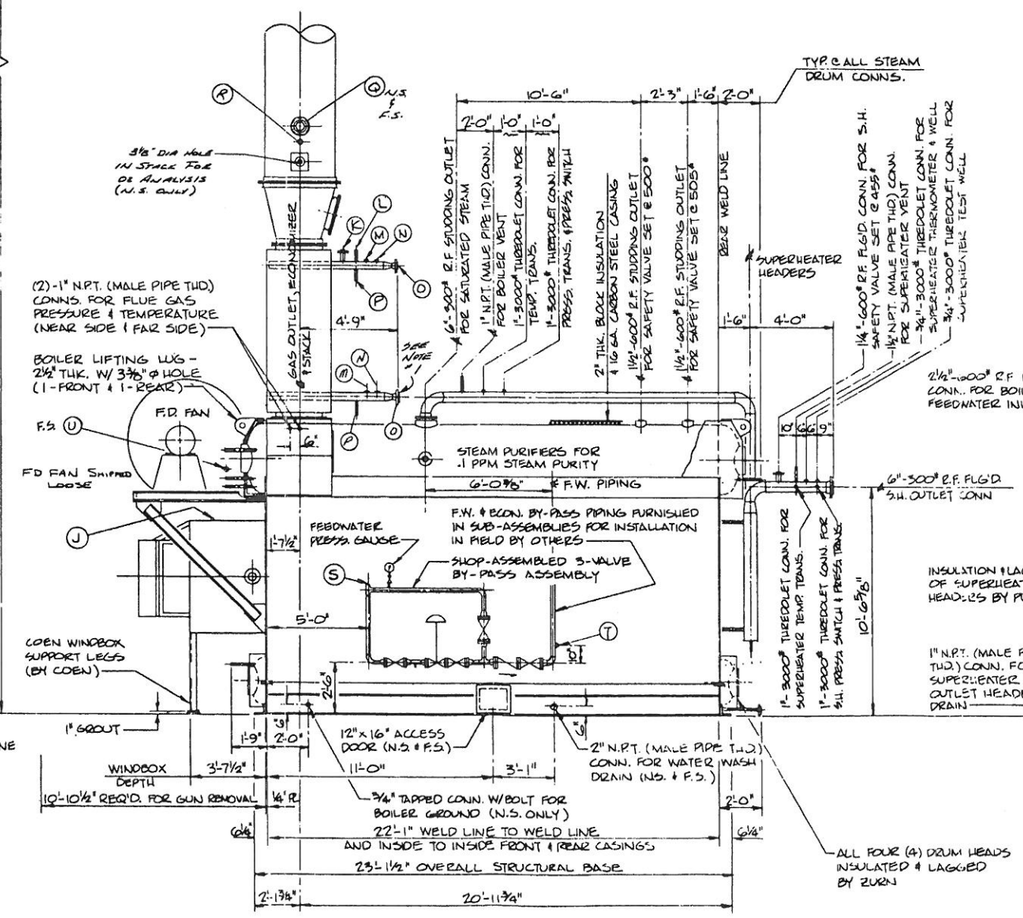

RIGHT HAND SIDE ELEVATION

NOTE #1 - MODIFICATIONS TO ECONOMIZER OUTLET HEADER NOT BY ZURN. TO BE DONE IN FIELD TO MATCH BY-PASS PIPING AS SHOWN ON ZURN DWG PD-E396

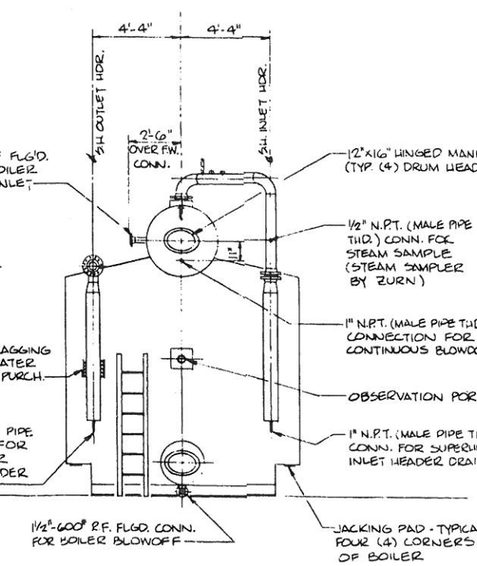

REAR ELEVATION

A	DWG REV. PER PAN-AM MKD. PRINT DATED 1-9-87 - ELEVS. REV. PER R. KIDD BY PH. 1-21-87 - DWG. UPDATED	1-23-87 D.R.K.	B	2½" F.W. CONN WAS 300# CHANGED RCW OUTLET MOR PER R. KIDD PH 2-13-87	2-16-87 R. MAKAREWICZ	C	ADDED NOTE #1 PER R. KIDD IN CALL 2-23-87	2-26-87 R. MAKAREWICZ	D	ADDED CO & O2 CONNECTIONS IN STACK PER R. KIDD PH. CHANGED EE & LIGHT STACK WELD DETAIL	REV. DWG. PER LATEST 3ED DESIGN & CUST.	3-27-87 R.P. & DRK	E	BLOWOFF CONN. WAS 1½"-300# R.F. FLG'D.	5-4-87 D.R.K.

NUMBER	SIZE	TYPE	ZURN INDUSTRIES, INC. ENERGY DIV. ERIE, PA U.S.A. 16512
0-1/2"	3-3000-4-1/2-0.600	WG-270-2-BE	
DRAWN BY	CHECKED BY	APPROVED BY	
D. LUBAL	D.R.K.	R.E.K.	GENERAL ARRANGEMENT
ORDER NO.	DATE	PRODUCT CODE	NASA - JOHNSON SPACE CENTER
16435	12-2-86	16B	WEBSTER, TEXAS
SCALE	DIM. NOT TO SCALE		
DWG NO. KA-1975	REV. E		

DWG. NO. KM-6498

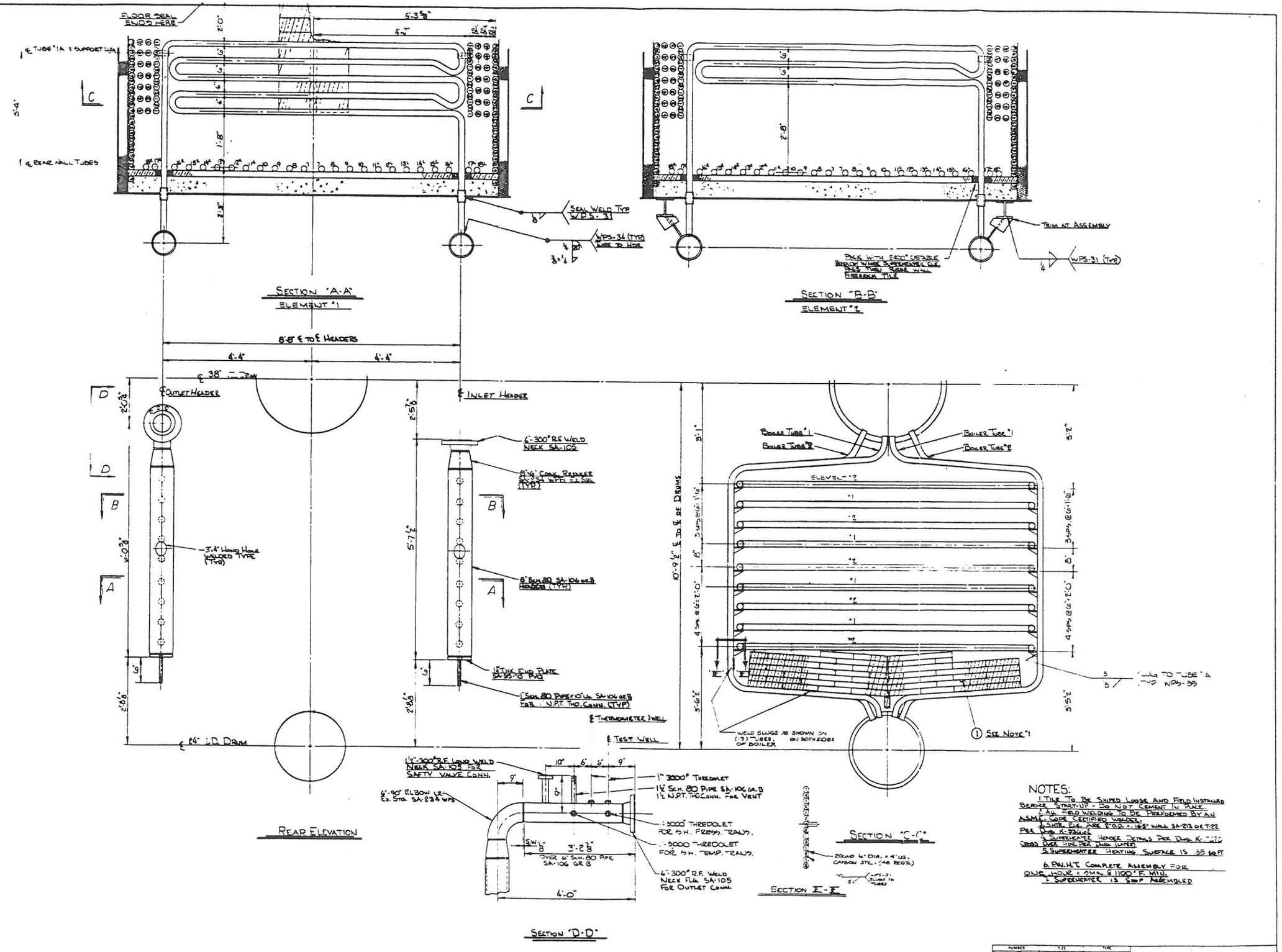

NOTES:

1. TILE TO BE SHIPED LOOSE AND FIELD INSTALLED BEFORE START-UP - DO NOT CEMENT IN PLACE.
2. ALL FIELD WELDING TO BE PREFORMED BY AN ASME - WOCE CERTIFIED WELDER.
3. SHIP ELE. PER P.O.D. - .165" WALL SA-213 GR T-22 PER DWG K-7316
4. SUPERHEATER HEADER DETAILS PER DWG. K-7316 CROSS OVER HDR. PER DWG. (LATER)
5. SUPERHEATER HEATING SURFACE IS .55 SQ FT
6. P.W.H.T. COMPLETE ASSEMBLY FOR ONE HOUR @ 2000 @ 1100°F. MIN.
7. SUPERHEATER IS SHOP ASSEMBLED

3	REVERSED ELEM. DESIGNATION - TOP ELEM. WAS "A" AND ALT. - TOP TO BOTTOM	12/24/87	ADDED SLUGS	4/16/87 PJS
2				
1				

NUMBER	SIZE	TYPE
DWG.	24"-300# & 300#	KEYSTONE
DRAWN BY	CHECKED BY	APPROVED BY
DATE	DATE	DATE
DWG. NO.	DATE	PRODUCT CODE
	7-2-87	198
SCALE 1"=1'-0"	DIM NOT TO SCALE	
DWG. NO. KM-6498	REV 3	

ZURN INDUSTRIES, INC. ENERGY DIV ERIE PA U.S.A. 16512

SUPERHEATER ASSEMBLY

NASA - JOHNSON SPACE CENTER

WEBSTER TEXAS

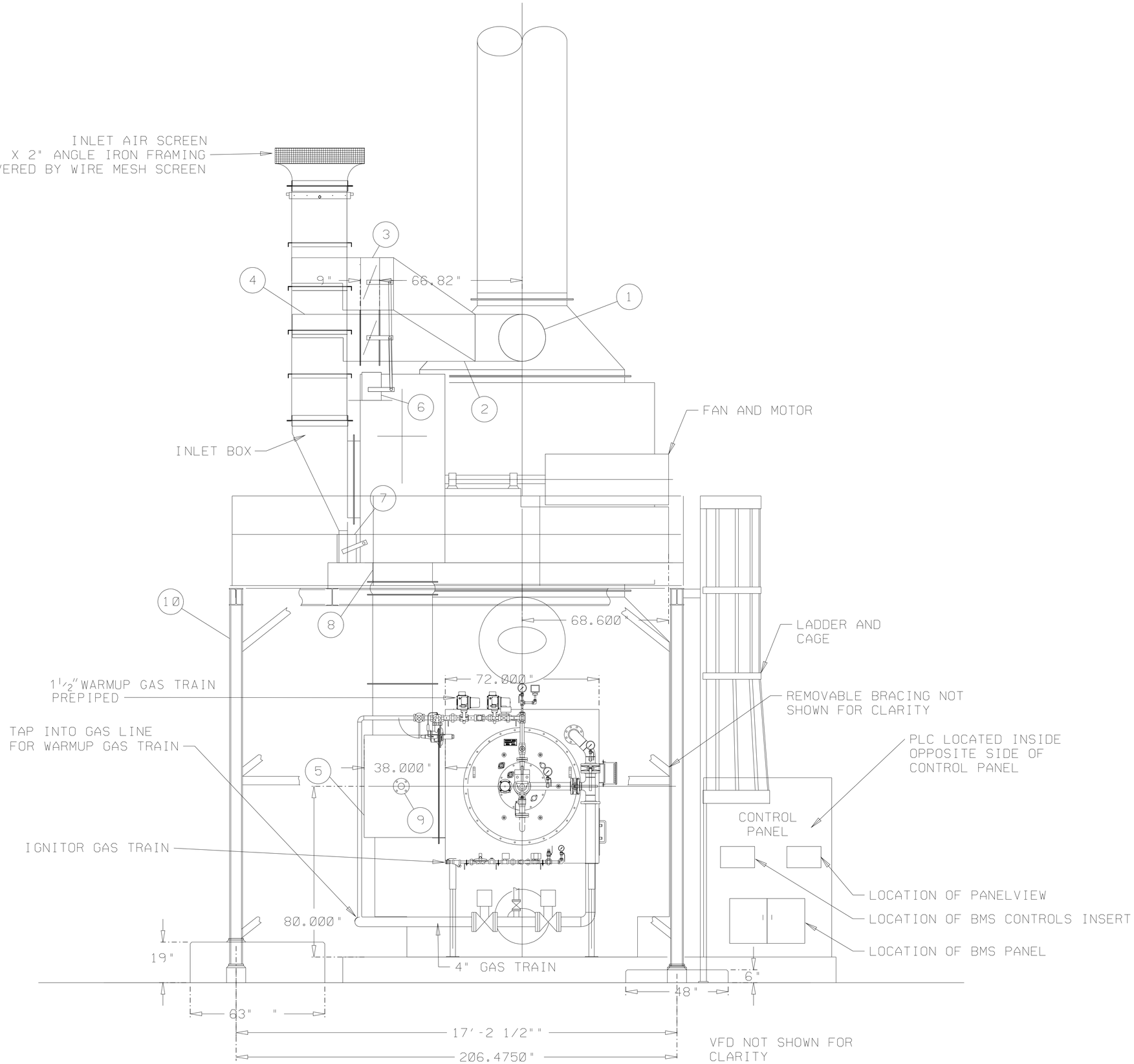

CAD FILE NAME: M24Z33.DGN

REVISION	DATE	DESCRIPTION
AS-BUILT	6-28-06	CSC517475A(PAG)

SIGNATURES		DATE
DR.PETE G	ENG REDRAWN	6-28-06
CH GJB	APPR GJB	7-13-07
GLENN J. BUNCH		7-13-07
REV		
DISCP		
PE		
APPR C. BENNETT		7-13-07

NATIONAL AERONAUTICS & SPACE ADMINISTRATION
LYNDON B. JOHNSON SPACE CENTER HOUSTON, TEXAS

BUILDING 24

ULNB GENERAL ARRANGEMENT
FRONT VIEW BOILER #4

PROJECT NO.
PROJECT ID MR
CODE IDENT.NO. 21356
SIZE F
SHEET NO. ___ OF ___
DWG NO. M-24-33

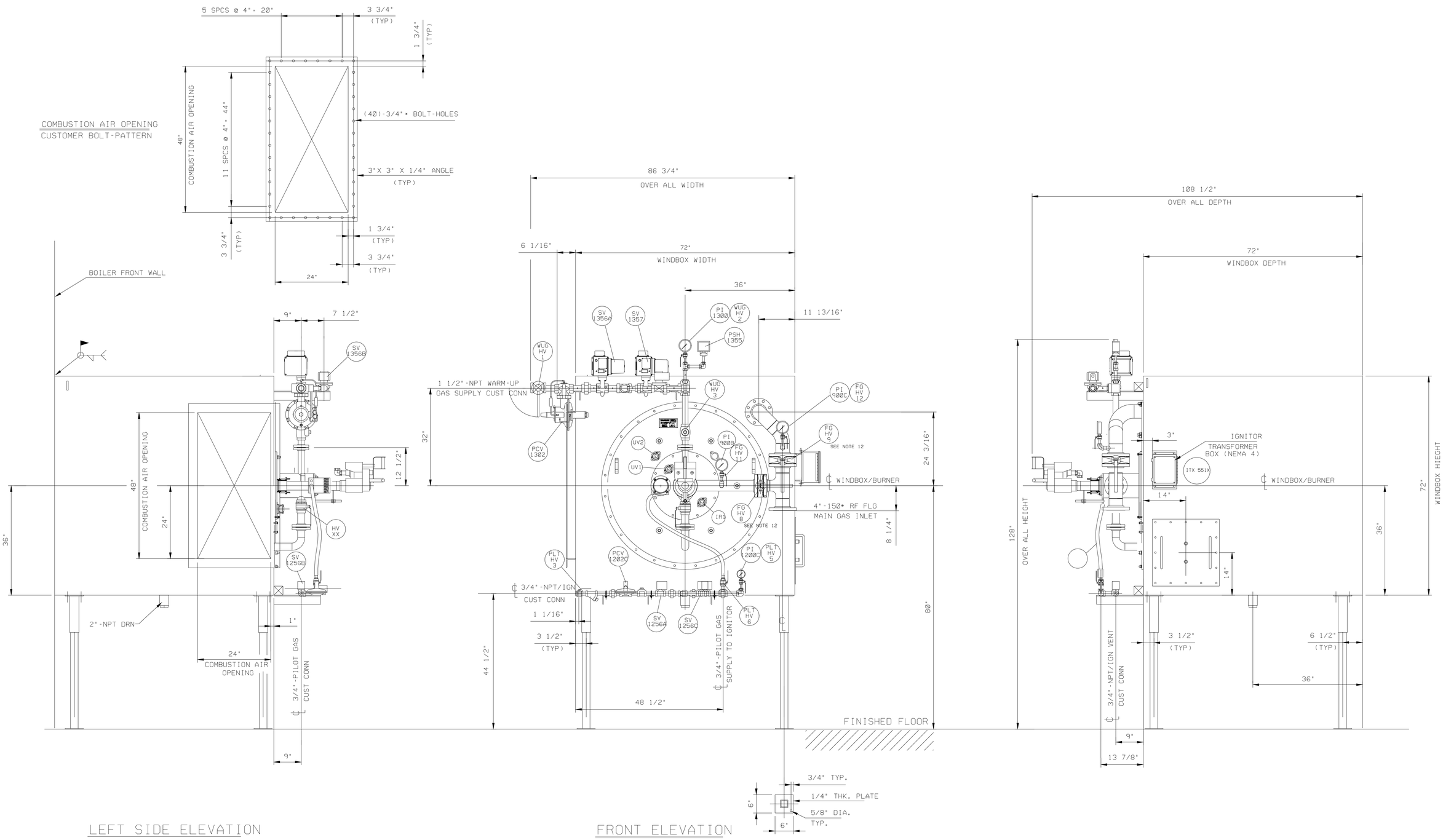

LEFT SIDE ELEVATION

FRONT ELEVATION

RIGHT SIDE ELEVATION

GENERAL NOTES:

1. ALL WINDBOX MATERIAL 1/4" THK A-36 PLATE. SURFACE PREPARATION AND FINISHING.

2. WINDBOX SEALED WELDED TO THE BOILER . WINDBOX BAFFLES WELDED TO THE WINDBOX BACK PL PRIOR TO BURNER INSTALLATION WINDBOX IS ALIGNED AND WELDED TO THE BOILER. TO ENSURE PROPER AIRFLOW DISTRIBUTION, ALL BAFFLES MUST RUN PARALLEL WITH BURNER CENTERLINE FOR ENTIRE WINDBOX DEPTH.

3. APPROXIMATELY 11'-0" CLEARANCE REQUIRED FROM FRONT OF WINDBOX TO REMOVE IGNITOR & BURNER.

4. WINDBOX SUPPORT LEGS MAY BE PROVIDED FOR SHOP FABRICATION AND SHIPPING. WHEN LEGS ARE PROVIDED THEY MAY BE REMOVED OR MODIFIED AS REQUIRED FOR INSTALLATION.

5. CERTAIN ITEMS IN SOME VIEWS HAVE BEEN OMITTED FOR CLARITY.

6. SEE ELECTRICAL DRAWINGS (SERIES 20) FOR ALL ELECTRICAL INFORMATION.

7. REFER TO ENGINEERING DATA SHEETS FOR VALVE TRAIN LINE SIZES AND MATERIAL SPECIFICATIONS FOR PIPING.

8. COMPONENT NUMBERS REFER TO ITEM AND TAG NUMBERS OF EQUIPMENT ON ENGINEERING DATA SHEETS. REFER TO SAME FOR COMPLETE ITEM DESCRIPTION.

9. ALL PIPING ARE SUITABLY SUPPORTED AND BRACKETED.

10. ALL INTERFACE PIPING TO WINDBOX PIPING CONNECTIONS TO BE SUPPLIED AND INSTALLED.

11. UNLESS OTHERWISE SPECIFIED DIMENSIONAL TOLERANCE ±/4"

12. VALVE POSITION TO BE PERMANENTLY FIXED AFTER START-UP.

REVISION	DATE	DESCRIPTION
AS-BUILT	6-29-06	CSC517475A(PAG)

SIGNATURES		DATE
DR. PETE G	ENG REDRAWN	6-29-06
CH GJB	APPR GJB	7-13-07
GLENN J. BUNCH		7-11-07
REV		
DISCP		
PE		
APPR C. BENNETT		7-13-07

NATIONAL AERONAUTICS & SPACE ADMINISTRATION
LYNDON B. JOHNSON SPACE CENTER HOUSTON, TEXAS

BUILDING 24

BOILER #4 WINDBOX PIPING ARRANGEMENT

PROJECT NO.
SHEET NO. ___ OF ___
PROJECT IDENT NO.
CODE IDENT.NO. 21356
SIZE F
DWG NO. M-24-33G

CAD FILE NAME: M24Z33G.DGN

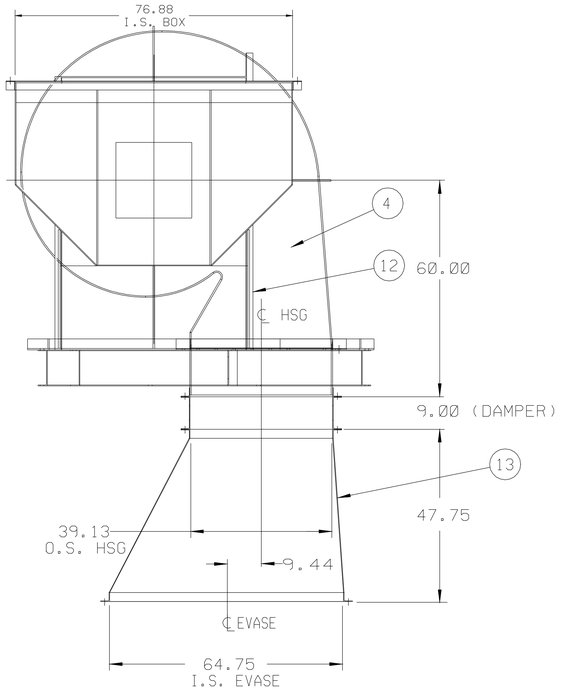

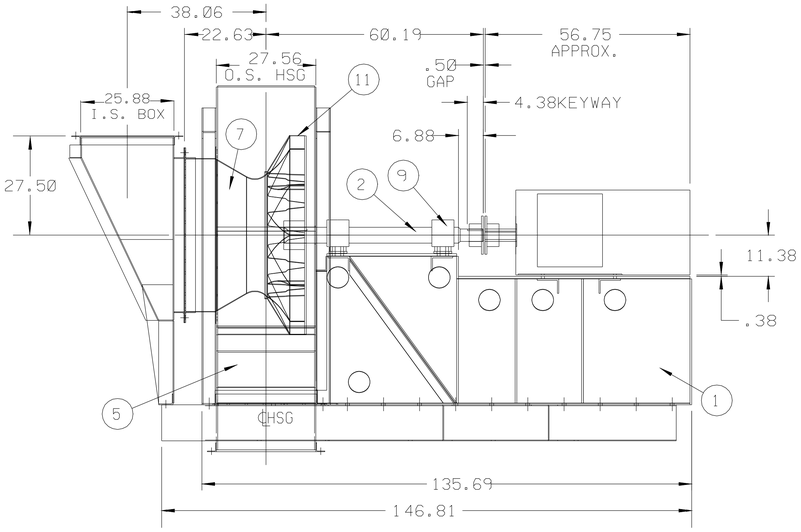

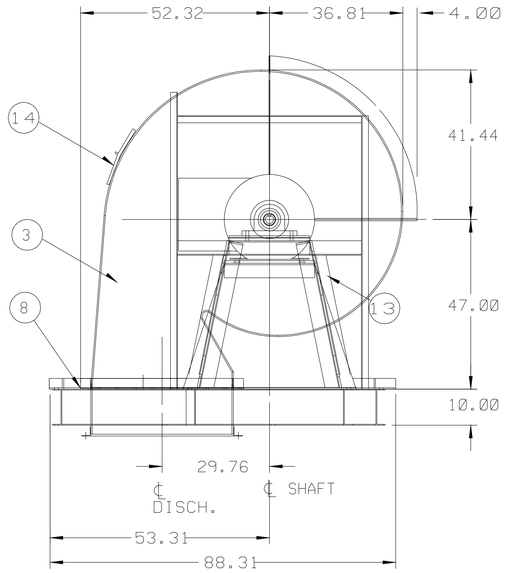

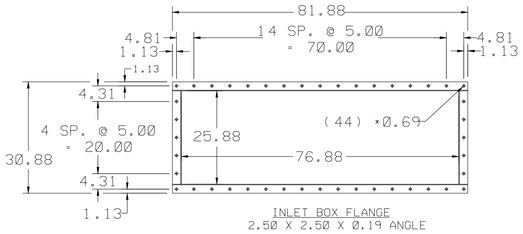

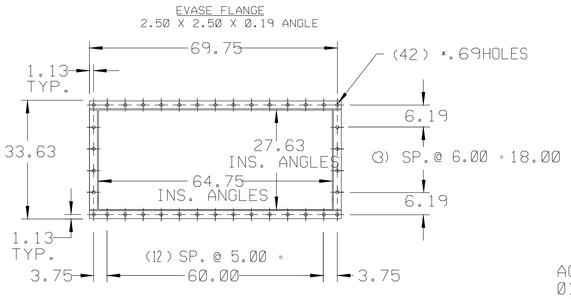

ACCESSORIES:
01. ACCESS DOOR, BOLTED
02. SHAFT AND BEARING GUARD
03. SHAFT SEAL
04. COUPLING FALK 1090T10 (NOTE 01)
05. COUPLING GUARD PER AS
06. HOUSING DRAIN, 3/4" 180776-001-07
07. PIE SPLIT HOUSING,
08. SHAFT SEAL
09. MOTOR: 200 HP 1800 RPM, 3/60/460, TEFC,
447T FRAME, FURN. & MTD. BY CSC
10. DETACHED INLET BOX 360° INTAKE PER BS180776-001-09
FLANGE PUNCHED PER DETAIL (NOTE 06)
13. DAMPER, OUTLET, OPPOSED BLADE PER AS160172-17
(NOTE 05)
14. C.S. PLATE 1/4" - 19" X 19"

NOTES:
01. MOUNT COUPLING - BOTH HALVES, FINAL ALIGNMENT OF
COUPLING IN FIELD BY CUSTOMER
02. PEDESTAL AND BASE TO HAVE REBAR, BASE TO HAVE BOTTOM PAN
03. TOTAL AMOUNT OF CONCRETE REQUIRED = 132.8 ^{3}FT
04. EVASE SHOWN IN (1) VIEW ONLY FOR SIMPLICITY
FLANGE PUNCHED SEE DETAIL
05. DAMPER SHOWN IN (1) VIEW ONLY FOR SIMPLICITY
06. INLET BOX SHOWN IN (2) VIEWS ONLY FOR SIMPLICITY
07. WEIGHT: FAN/ INCLUDING ACC. = 8288 LBS MOTOR = 2610 LBS
BASE = 1351 LBS. CONCRETE = 18,199 LBS

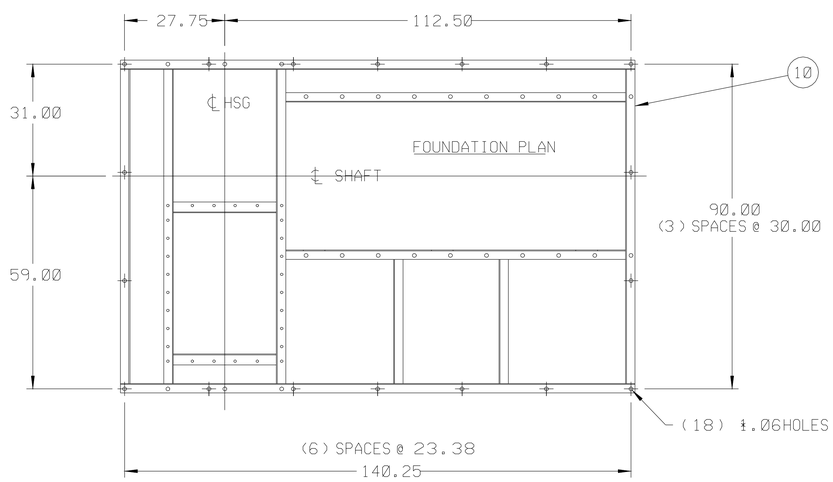

13	EVASE	NOTE 04	AS180776-001-05
12	FRAME	W/ 3.00X 4.00BASE ANGLES	AS180776-001-04
11	WHEEL-490	50% WDTH	S.S.I1 -
10	INERTIA_BASE 10"		BS180776-001-01
9	SRB-407	SPLIT_ROLLER_BRG	× 4.437
8	OUTLET_FLANGE	3.00X 3.00(PUNCHED)	AS160172-14
7	INLET_FUNNEL-490	W/ INLET COLLAR PER AS13184 EXCEPT 'A'=8.69	BS9752
6	INLET_FLANGE	3.00X 3.00(PUNCHED)	AS160172-14
5	FAN_HOUSING_SCROLL	.25_THK	PER BS9566 EXCEPT 4.06 NARROWER THAN STD
4	FAN_HOUSING_INLET_SIDE	.25_THK	BS9566
3	FAN_HOUSING_DRIVE_SIDE	.25_THK	BS9566
2	ARR8_SHAFT	4.437DIA. W/1.00X .50KEYWAY TO 3.437DIA. W/.88X .44KEYWAY	AS180776-001-03
1	ARR8_PEDESTAL		BS180776-001-02

BILL OF MATERIALS

REVISION	DATE	DESCRIPTION
AS-BUILT	6-29-06	CSC517475A(PAG)

SIGNATURES		DATE
DR. PETE G	ENG REDRAWN	6-29-06
CH GJB	APPR GJB	7-13-07
GLENN J. BUNCH		7-13-07
REV		
DISCP		
PE		
APPR C. BENNETT		7-13-07

NATIONAL AERONAUTICS & SPACE ADMINISTRATION
LYNDON B. JOHNSON SPACE CENTER HOUSTON, TEXAS
BUILDING 24

200 HP FORCED DRAFT FAN

PROJECT NO. | SHEET NO. ___ OF ___
PROJECT IDENT. | DWG NO. M-24-33M
CODE IDENT. NO. 21556 | SIZE F

CAD FILE NAME: M24Z33M.DGN

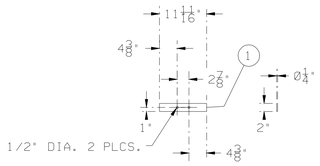

DETAIL 1

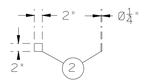

DETAIL 2

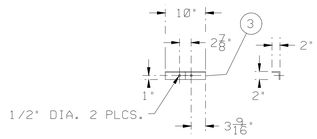

DETAIL 3

HBW DRAWING NO. C-694M03 BILL OF MATERIALS

ITEM	QTY.	PC.MK. / UNIT MEAS	DESCRIPTION	MAT'L	HBW PART NO/ REQ OR PO NO
1	3	EACH	FLAT BAR, 2" X 11 11/16" X 1/4" (DRILLED PER DETAIL)	A-36	HOUSTON
2	18	EACH	FLAT BAR, 2" X 2" X 1/4"	A-36	HOUSTON
3	3	EACH	ANGLE IRON, 2" X 2" X 1/4" X 10" LONG (DRILLED PER DETAIL)	A-36	HOUSTON
4	6	EACH	HEXBOLT, 3/8" X 3" LONG GRADE 5	GRADE 5	HOUSTON
5	6	EACH	HEXNUT, 1/2" H.D.	C.S.	HOUSTON
6	2	EACH	UNION, 1 1/2" 3000# SOCKET WELD ANSI B16.11	SA-105	HOUSTON
7	2	EACH	PIPE, 1 1/2" SCH 80 X 1 7/16" LONG ANSI B36.10	SA-106B	HOUSTON
8	4	EACH	ELBOW, 1 1/2" X 45° X 3000# SOCKET WELD ANSI B16.11	SA-105	HOUSTON
9	2	EACH	PIPE, 1 1/2" SCH 80 X 2 1/2" LONG ANSI B36.10	SA-106B	HOUSTON
10	2	EACH	PIPE, 1 1/2" SCH 80 X 21'-0 1/16" LONG ANSI B36.10	SA-106B	HOUSTON
11	2	EACH	RETURN, 1 1/2" X 180° X SCH. 80 BORE ANSI B16.9	SA-234WPB	HOUSTON
12	2	EACH	PIPE, 2" SCH 80 X 6" LONG ANSI B36.10	SA-106B	HOUSTON
13	1	EACH	PIPE, 1 1/2" SCH 80 X 20'-10 1/2" LONG ANSI B36.10	SA-106B	HOUSTON
14	2	EACH	PIPE, 1 1/2" SCH 80 X 9 5/8" LONG ANSI B36.10	SA-106B	HOUSTON
15	2	EACH	FLANGE, 1 1/2" 600# RFWN ANSI B16.5	SA-106B	HOUSTON

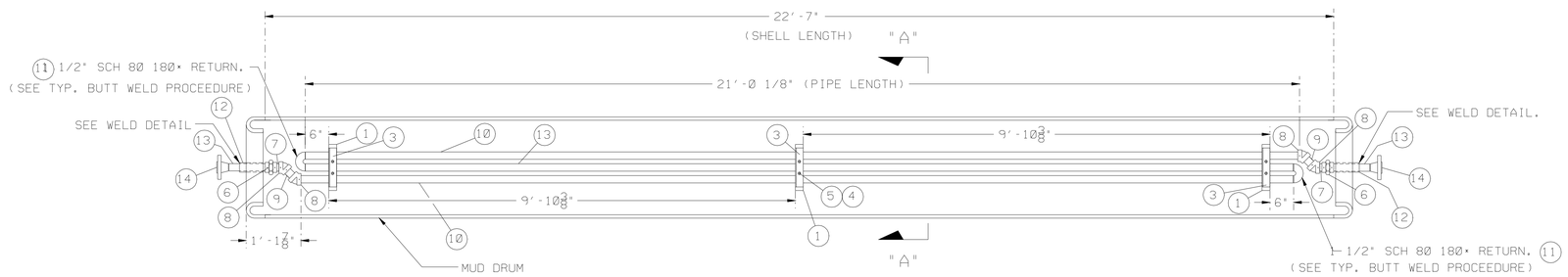

TOP VIEW

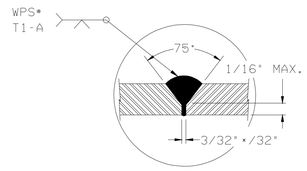

TYPICAL BUTT WELDING PROCEDURE

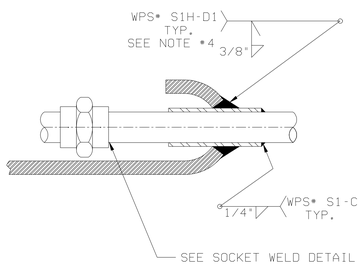

WELD DETAIL

SCALE: NTS

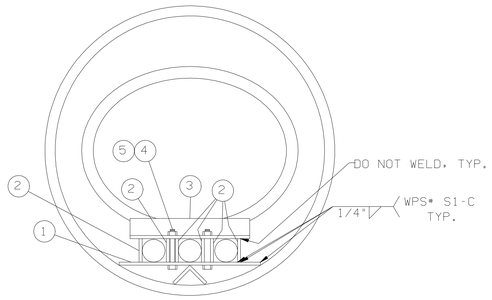

SECTION "A-A"

SCALE: 3X

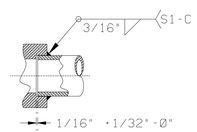

SOCKETWELD DETAIL

SCALE: 4X

CERTIFIED BY
HOLMAN BOILER WORKS
SERIAL # H25-52727
MAWP 500 PSIG @ 650°F

PART YEAR 2006

DESIGN DATA

WHERE APPLICABLE, THE ABOVE IS TO BE DESIGNED, CONSTRUCTED AND STAMPED IN STRICT ACCORDANCE WITH ASME CODE SECT. I 2001 EDITION, 2002 ADDENDUM.

DESIGN PRESSURE: 500 PSIG @ 650 °F.
HYDROSTATIC PRESSURE: IN THE FIELD @ 675 P.S.I.

POST WELD HEAT TREAT: ☐ NO ☒ YES-DESCRIPTION BELOW
A. HEAT @ A RATE OF 250 ° PER HOUR TO 1125 °F.
B. SOAK @ 1125 ° FOR 1 1/2 HOURS.
C. COOL @ A RATE OF 400 °F PER HOUR, BEFORE RELEASING TO AMBIENT AIR @ 800 °F.
STRESS RELIEVING CHART IS REQUIRED.
NON-DESTRUCTIVE EXAMINATION REQUIREMENTS: ☒ NO ☒ YES V.T.
WELD PROCEDURES: ALL WELDING TO BE PERFORMED IN ACCORDANCE WITH HOLMAN BOILER WORKS, INC. WELDING PROCEDURE SPECIFICATIONS.

SHOP NOTES:

1. A 1/16" GAP IS TO BE MAINTAINED AT FIT-UP AT THE BOTTOM OF THE SOCKET WELL ON ALL SOCKET WELD FITTINGS PRIOR TO WELDING.
2. ALL WELDS ARE TO BE MADE IN ACCORDANCE WITH THE A.S.M.E. CODE SECTION I 2004 EDITION, 2005 ADDENDA.
3. POST WELD HEAT TREATMENT IS REQUIRED PER DESIGN NOTES.
4. WELDS FROM DRUM TO SLEEVES ARE TO BE PREHEATED TO 300° F.

REVISION	DATE	DESCRIPTION
AS-BUILT	6-15-07	CSC517475A(GJB)

SIGNATURES		DATE
DR. GJB	ENG REDRAWN	6-15-07
CH GJB	APPR GJB	7-13-07
GLENN J. BUNCH		7-13-07
REV		
DISCP		
PE		
APPR C. BENNETT		7-13-07

NATIONAL AERONAUTICS & SPACE ADMINISTRATION
LYNDON B. JOHNSON SPACE CENTER HOUSTON, TEXAS
BUILDING 24

BOILER #4 MUD DRUM HEATER COIL

PROJECT NO. | SHEET NO. ___ OF ___
PROJECT ID MR | DWG NO. M-24-33N
CODE IDENT.NO. 21356 | SIZE F

CAD FILE NAME: M24Z33N.DGN